PW Ladder Cable Tray
Vertical Fitting

45VO
Vertical Outside 45° Elbow

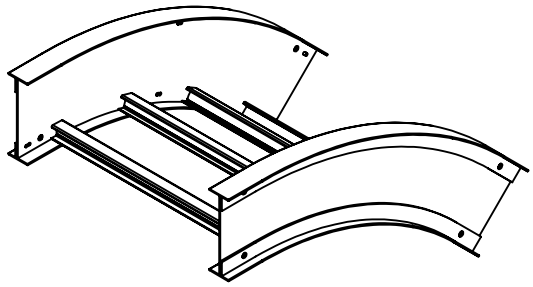

LD and SB

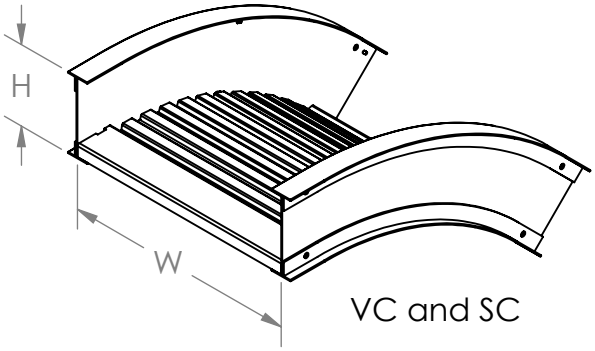

VC and SC

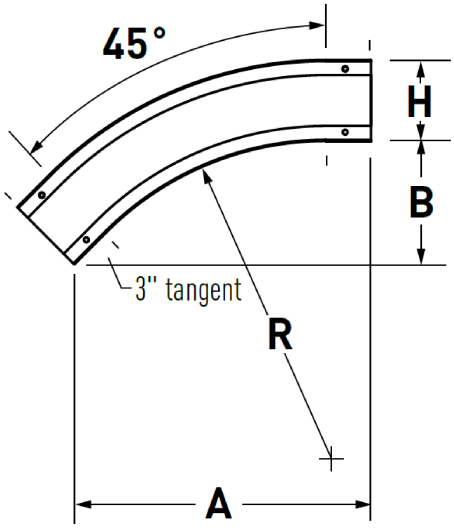

ITRAY VERTICAL INSIDE ELBOW CATALOG NUMBERING EXAMPLE:

BOTTOM TYPE ← **LD-6A-45VO12-06** → WIDTH

VENTED
- **LD** – Ladder Rung
- **VC** – Vented Corrugated

NON-VENTED
- **SC** – Solid Corrugated
- **SB** – Solid Bottom

RAIL HEIGHT
- **4** – 4"
- **5** – 5"
- **6** – 6"
- **7** – 7"

MATERIAL
- **A**

FITTING CODE

RADIUS
- **12** – 12"
- **24** – 24"
- **36** – 36"

WIDTH
- **06** – 6"
- **09** – 9"
- **12** – 12"
- **18** – 18"
- **24** – 24"
- **30** – 30"
- **36** – 36"

Radius R	Rail Height H	A	B
12	4-7	13 5/8	5 5/8
24		22 1/8	9 1/8
36		30 5/8	12 5/8

- **Material:** Aluminum Alloy 6063 and 5052
- **Finish:** Plain
- **Bottom:** LD: 1" wide rung
  SB: Flat sheet over Rung
  SC: Solid Corrugated
  VC: Vented Corrugated
- **Construction:** Welded
- **Tray Design:** Tray construction and markings are per the latest edition of NEMA Standards Publication VE1, CSA C22.2 No. 126
- **Connectors:** All fittings are supplied with necessary connectors and fasteners
- **Fitting heights (H):** 4", 5", 6", 7"

Legrand
8319 State Route 4
Mascoutah, IL 62258 USA
800-658-4641
618-566-3230
Fax 618-566-3250
www.legrand.us/cablofil

Copyright © 2013 Cablofil, Inc.

CABCS1123 - IT VO45